DATASHEET

Modular-Adapter RJ45 UTP

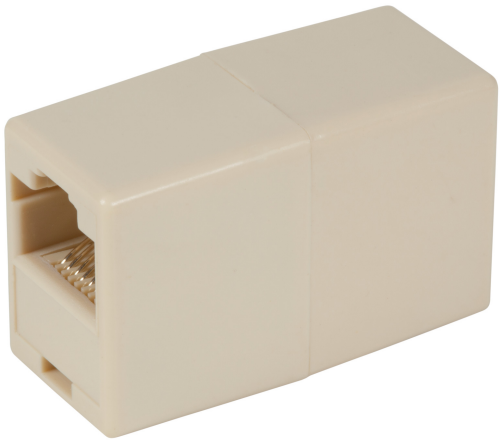

General data

Connecting adapter for patch cables
2x RJ45 connectors unshielded
Allocation: 1:1
Plastic housing

Tekniske egenskaber

Available variants

ArtNr.	Bezeichnung	screened
37503.1	Modular-Adapter RJ45 UTP	False

datasheets.content.drawings

This datasheet was created automatically on 29-11-2026 . Technical changes reserved.

EFB-Elektronik GmbH
Striegauer Straße 1
33719 Bielefeld

fon: +49 521 40 41 8-0
fax: +49 521 40 41 8-50

info@efb-elektronik.de
www.efb-elektronik.de

WIR SORGEN FÜR VERBINDUNG
WE CARE FOR CONNECTION

DATASHEET

Modular-Adapter RJ45 UTP

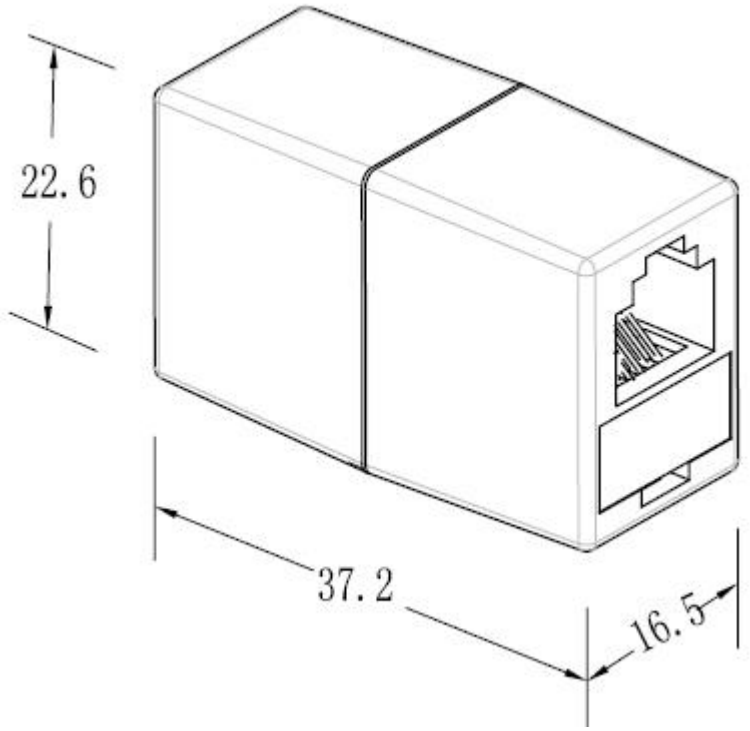

Note on Intended Use

This data sheet is intended solely to describe the technical characteristics of the product. It does not replace an assessment of the product's suitability for a specific application. The user is responsible for ensuring that the product is used in accordance with its technical specifications and applicable legal and regulatory requirements.

EFB-Elektronik GmbH
Striegauer Straße 1
33719 Bielefeld

fon: +49 521 40 41 8-0
fax: +49 521 40 41 8-50

info@efb-elektronik.de
www.efb-elektronik.de

WIR SORGEN FÜR VERBINDUNG
WE CARE FOR CONNECTION