DATASHEET

Adapter ST Simplex OS2 metal housing

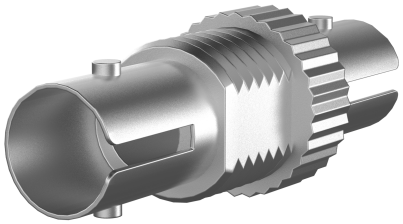



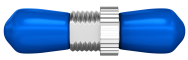



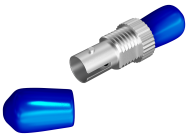

General data

ST Simplex Adapter with Metal Housing

Tekniske egenskaber

Available variants

ArtNr.	Bezeichnung	Category	Colour	Insertion loss 1310nm	Model	Suitable for type of fibre
53103.3	Adapter ST Simplex OS2 metal housing	OS2	metall	< 0,2 dB	ST	Single mode

datasheets.content.drawings

This datasheet was created automatically on 23-11-2026 . Technical changes reserved.

EFB-Elektronik GmbH
Striegauer Straße 1
33719 Bielefeld

fon: +49 521 40 41 8-0
fax: +49 521 40 41 8-50

info@efb-elektronik.de
www.efb-elektronik.de

WIR SORGEN FÜR VERBINDUNG
WE CARE FOR CONNECTION

DATASHEET

Adapter ST Simplex OS2 metal housing

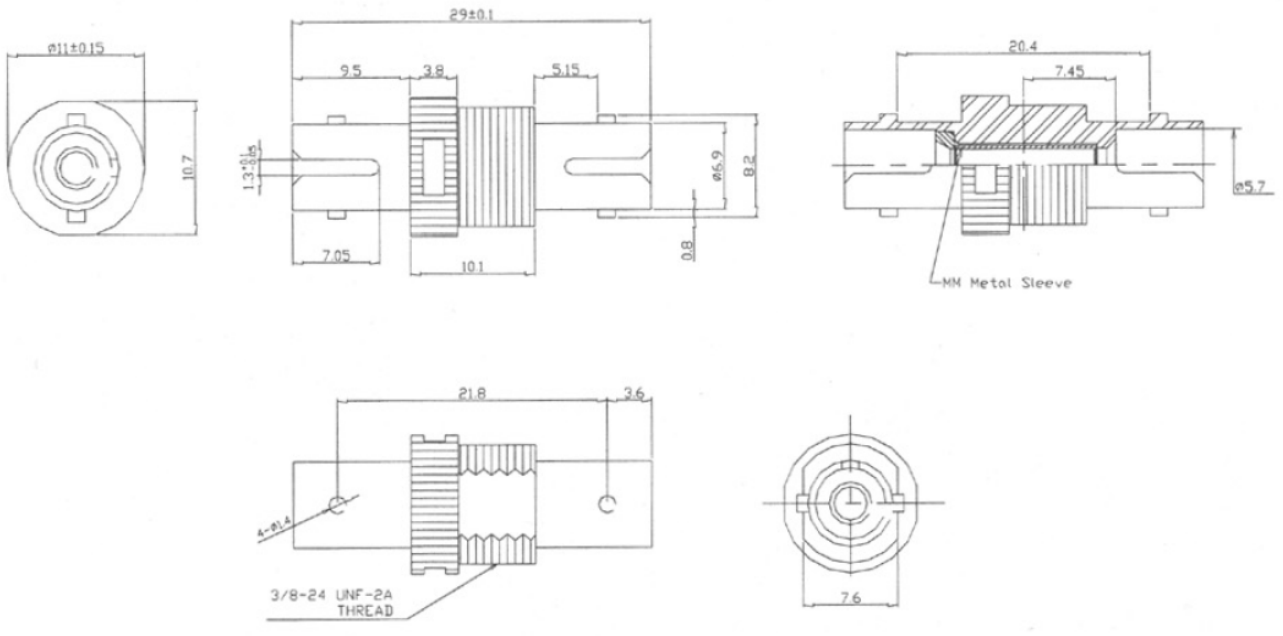

Note on Intended Use

This data sheet is intended solely to describe the technical characteristics of the product. It does not replace an assessment of the product's suitability for a specific application. The user is responsible for ensuring that the product is used in accordance with its technical specifications and applicable legal and regulatory requirements.

EFB-Elektronik GmbH
Striegauer Straße 1
33719 Bielefeld

fon: +49 521 40 41 8-0
fax: +49 521 40 41 8-50

info@efb-elektronik.de
www.efb-elektronik.de

WIR SORGEN FÜR VERBINDUNG
WE CARE FOR CONNECTION