DATASHEET

RJ45 Patch Cord Cat.5e S/UTP PVCDätwyler 5502 TM11 green 0,5m



General data

RJ45 patch cable Cat.5e SF/UTP LSZH Draka UC300 TM11 crossed

The Cat.5e patch cable has gold-plated contacts and meets the requirements for 2.5Gbit Ethernet.

Technical product properties< br>• Cat .5e
• SF/UTP cable with AWG26/7
• Jacket material made of halogen-free LSZH
• Fire protection: flame-retardant, halogen-free, low smoke
• Plug connection: RJ45 to RJ45
• Has gold-plated contacts< br>
The jacket of the shielded patch cable is made of halogen-free LSZH material. In addition, the cable offers the option of power supply via PoE according to IEEE802.3af, PoE+ according to IEEE802.3at and 4PPoE according to IEEE802.3bt.

The assignment of the TM11 plugs is the classic crossover for Gigabit Ethernet: 1-3 , 2-6, 3-1, 4-7, 5-8, 6-2, 7-4, 8-5.

The network cable has a copper conductor material and is ideal for applications in structured building cabling, Industrial Ethernet and in data centers. The bandwidth is up to 100 MHz.

This datasheet was created automatically on 23-11-2026 . Technical changes reserved.

EFB-Elektronik GmbH
Striegauer Straße 1
33719 Bielefeld

fon: +49 521 40 41 8-0
fax: +49 521 40 41 8-50

info@efb-elektronik.de
www.efb-elektronik.de

WIR SORGEN FÜR VERBINDUNG
WE CARE FOR CONNECTION

DATASHEET

RJ45 Patch Cord Cat.5e S/UTP PVCDätwyler 5502 TM11 green 0,5m

Tekniske egenskaber

Available variants

ArtNr.	Bezeichnung	Length	POE class	Length tolerance
K8706.0,50	RJ45 Patch Cord Cat.5e S/UTP PVCDätwyler 5502 TM11 green 0,5m	0.5 m	PoE acc. to IEEE802.3af;PoE+ acc. to IEEE802.3at;4PPoE acc. to IEEE802.3bt	±5 %
K8706.1	RJ45 Patch Cord Cat.5e S/UTP PVCDätwyler 5502 TM11 green 1m	1.0 m	PoE acc. to IEEE802.3af;PoE+ acc. to IEEE802.3at;4PPoE acc. to IEEE802.3bt	±5 %
K8706.1,5	RJ45 Patch Cord Cat.5e S/UTP PVCDätwyler 5502 TM11 green 1,5m	1.5 m	PoE acc. to IEEE802.3af;PoE+ acc. to IEEE802.3at;4PPoE acc. to IEEE802.3bt	±5 %
K8706.2	RJ45 Patch Cord Cat.5e S/UTP PVCDätwyler 5502 TM11 green 2m	2.0 m	PoE acc. to IEEE802.3af;PoE+ acc. to IEEE802.3at;4PPoE acc. to IEEE802.3bt	±5 %
K8706.3	RJ45 Patch Cord Cat.5e S/UTP PVCDätwyler 5502 TM11 green 3m	3.0 m	PoE acc. to IEEE802.3af;PoE+ acc. to IEEE802.3at;4PPoE acc. to IEEE802.3bt	±5 %
K8706.5	RJ45 Patch Cord Cat.5e S/UTP PVCDätwyler 5502 TM11 green 5m	5.0 m	PoE acc. to IEEE802.3af;PoE+ acc. to IEEE802.3at;4PPoE acc. to IEEE802.3bt	±5 %
K8706.7,5	RJ45 Patch Cord Cat.5e S/UTP PVCDätwyler 5502 TM11 green 7,5m	7.5 m	PoE acc. to IEEE802.3af;PoE+ acc. to IEEE802.3at;4PPoE acc. to IEEE802.3bt	±5 %
K8706.10	RJ45 Patch Cord Cat.5e S/UTP PVCDätwyler 5502 TM11 green 10m	10.0 m	PoE acc. to IEEE802.3af;PoE+ acc. to IEEE802.3at;4PPoE acc. to IEEE802.3bt	±5 %
K8706.15	RJ45 Patch Cord Cat.5e S/UTP PVCDätwyler 5502 TM11 green 15m	15.0 m	PoE acc. to IEEE802.3af;PoE+ acc. to IEEE802.3at;4PPoE acc. to IEEE802.3bt	±5 %
K8706.20	RJ45 Patch Cord Cat.5e S/UTP PVCDätwyler 5502 TM11 green 20m	20.0 m	PoE acc. to IEEE802.3af;PoE+ acc. to IEEE802.3at;4PPoE acc. to IEEE802.3bt	±5 %
K8706.25	RJ45 Patch Cord Cat.5e S/UTP PVCDätwyler 5502 TM11 green 25m	25.0 m	PoE acc. to IEEE802.3af;PoE+ acc. to IEEE802.3at	±5 %
K8706.30	RJ45 Patch Cord Cat.5e S/UTP PVCDätwyler 5502 TM11 green 30m	30.0 m	PoE acc. to IEEE802.3af;PoE+ acc. to IEEE802.3at	±5 %
K8706.40		40.0 m		

datasheets.content.drawings

This datasheet was created automatically on 23-11-2026 . Technical changes reserved.

EFB-Elektronik GmbH
Striegauer Straße 1
33719 Bielefeld

fon: +49 521 40 41 8-0
fax: +49 521 40 41 8-50

info@efb-elektronik.de
www.efb-elektronik.de

WIR SORGEN FÜR VERBINDUNG
WE CARE FOR CONNECTION

DATASHEET

RJ45 Patch Cord Cat.5e S/UTP PVCDätwyler 5502 TM11 green 0,5m

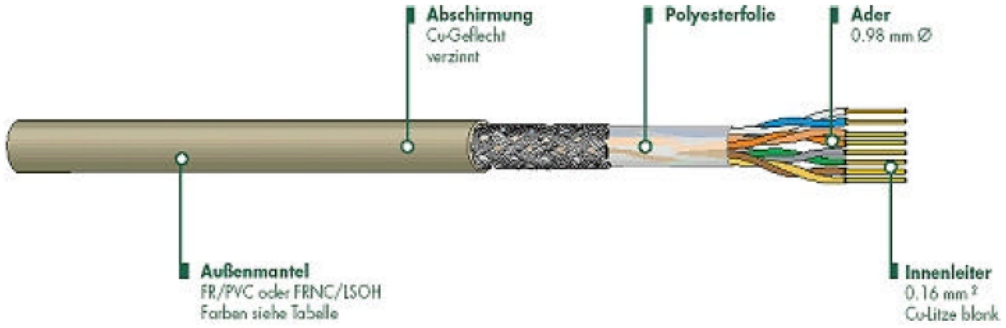

Belegung: 1 -sw- 1
2 -gn- 2
3 -rt- 3
4 -bl- 4
5 -ws- 5
6 -or- 6
7 -ge- 7
8 -br- 8
Schirm beidseitig auf Gehäuse!

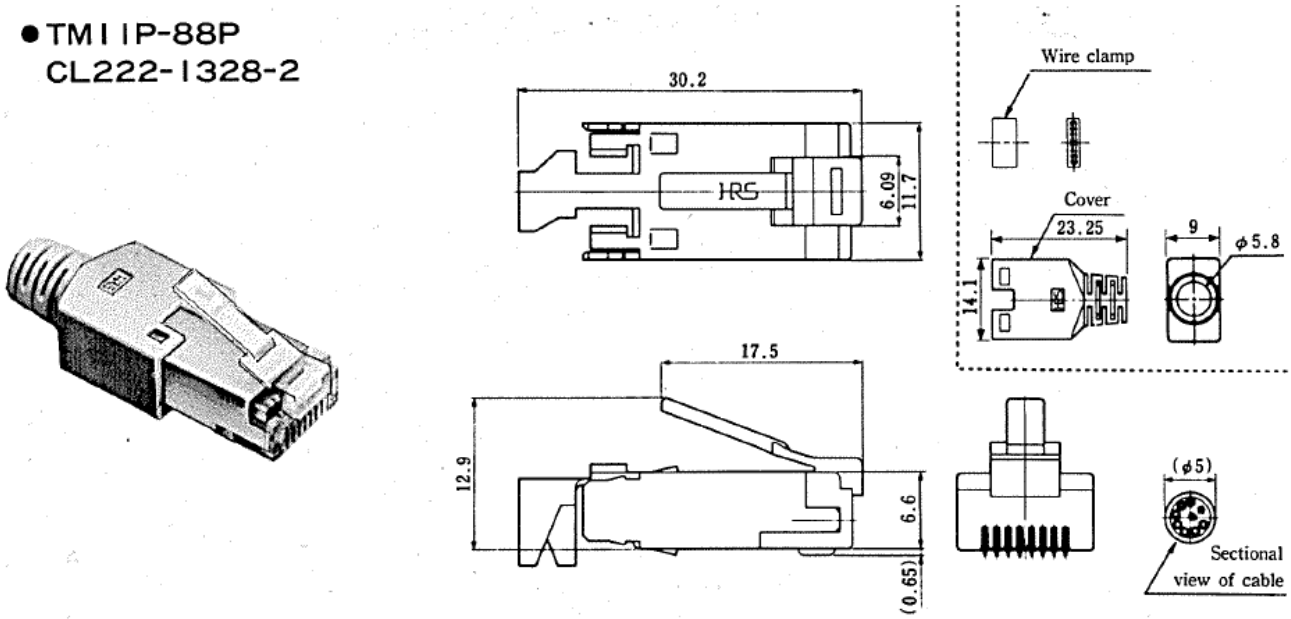

This datasheet was created automatically on 23-11-2026 . Technical changes reserved.

EFB-Elektronik GmbH
Striegauer Straße 1
33719 Bielefeld

fon: +49 521 40 41 8-0
fax: +49 521 40 41 8-50

info@efb-elektronik.de
www.efb-elektronik.de

WIR SORGEN FÜR VERBINDUNG
WE CARE FOR CONNECTION

DATASHEET

RJ45 Patch Cord Cat.5e S/UTP PVCDätwyler 5502 TM11 green 0,5m

Note on Intended Use

This data sheet is intended solely to describe the technical characteristics of the product. It does not replace an assessment of the product's suitability for a specific application. The user is responsible for ensuring that the product is used in accordance with its technical specifications and applicable legal and regulatory requirements.

EFB-Elektronik GmbH
Striegauer Straße 1
33719 Bielefeld

fon: +49 521 40 41 8-0
fax: +49 521 40 41 8-50

info@efb-elektronik.de
www.efb-elektronik.de

WIR SORGEN FÜR VERBINDUNG
WE CARE FOR CONNECTION