Art.-Nr. 53319.3

Singlemode ASC/ASC duplex adaptor
metal housing, ceramic sleeve , with dust cap

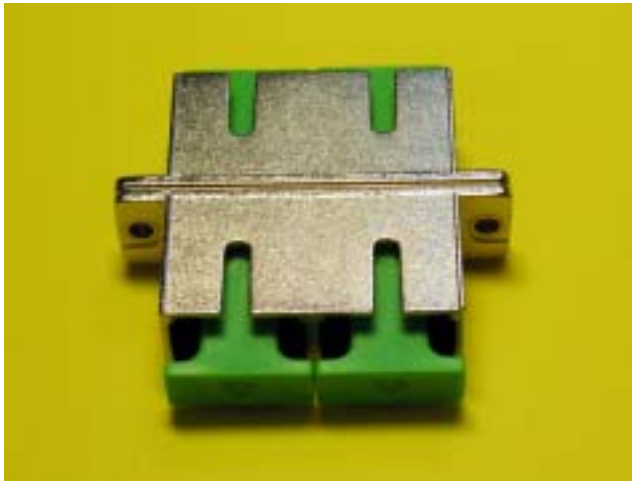

Specification

Item	Adaptors
Sleeve Material	Ceramic
Typical Insertion Loss	0.1dB
Operating Temperature	-40ºC/ +75ºC
Storage Temperature	-55ºC/ +85ºC

The performance of the adaptors has been carefully designed to meet the toughest Telcordia standards
EIA-455 , GR-326-CORE
in the tests of:

- OPTICAL CHARACTERISTICS
- VIBRATION TEST
- THERMAL CYCLING
- IMPACT RESISTANCE
- SALT SPRAY EROSION
- THERMAL AGING
- HUMIDITY RESISTANCE
- OTHERS
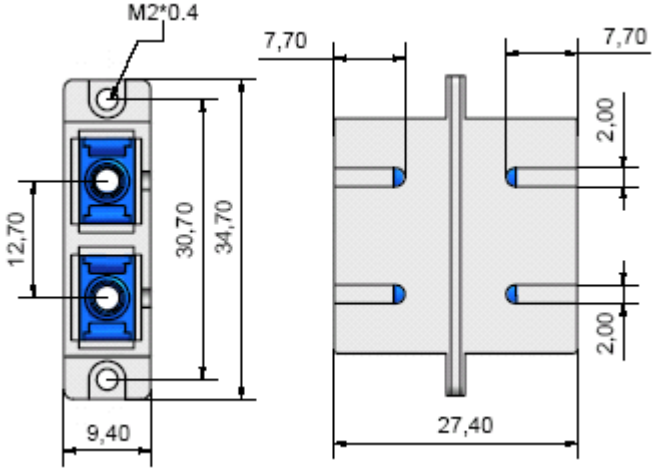
Mechanical Diagram